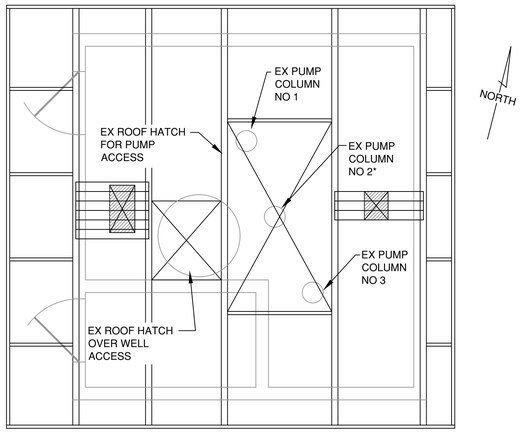

1/M1 Pump Station Roof Plan View

SCALE: 1/4" = 1'-0"

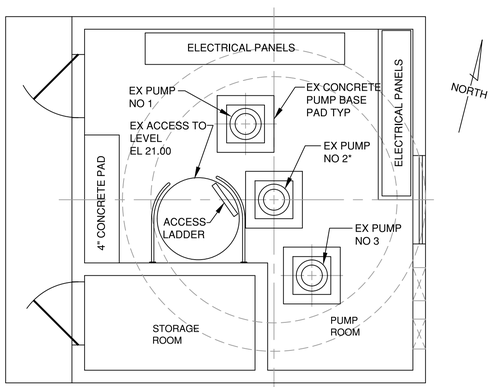

2/M1 Pump Station Plan View Floor EL 37.00

SCALE: 1/4" = 1'-0"

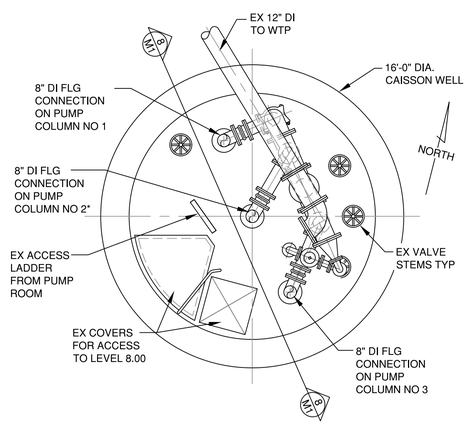

3/M1 Pump Station Plan View Floor EL 21.00

SCALE: 1/4" = 1'-0"

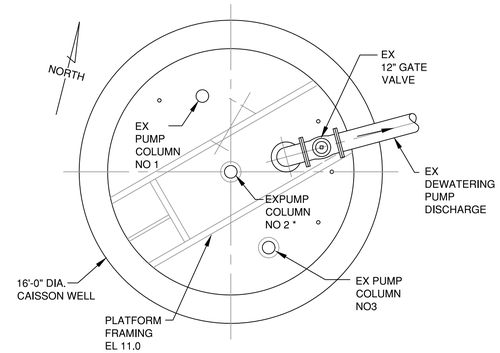

4/M1 Pump Station Plan View Floor EL 11.00

SCALE: 1/4" = 1'-0"

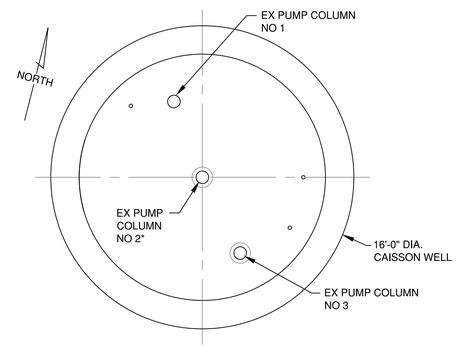

5/M1 Pump Station Plan View Floor EL -1.5

SCALE: 1/4" = 1'-0"

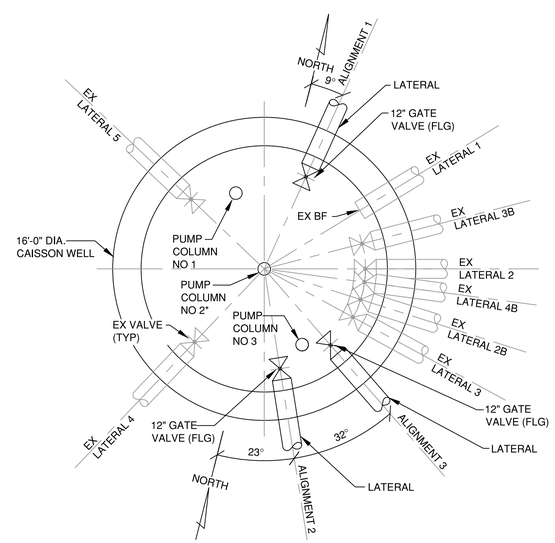

6/M1 Pump Station Plan View Floor EL -14.5

SCALE: 1/4" = 1'-0"

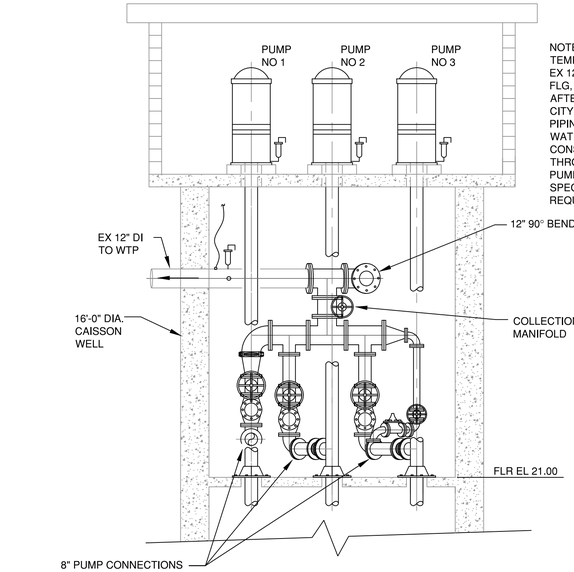

NOTE:
TEMPORARY PUMPS MAY BE CONNECTED TO EX 12-INCH 90° BEND AFTER REMOVING BLIND FLG, AND/OR EX 8-INCH PUMP CONNECTION AFTER PUMP #3 HAS BEEN REMOVED BY THE CITY. CONTRACTOR TO PROVIDE PUMPS, PIPING, AND VALVES AS REQUIRED TO CONVEY WATER FROM THE CAISSON TO THE WTP CONSTRUCTION WATER MUST BE ROUTED THROUGH A SETTLING TANK PRIOR TO BEING PUMPED INTO THE MANIFOLD. SEE SPECIFICATIONS FOR ADDITIONAL REQUIREMENTS.

8/M1 Pump Station Elevation View Floor EL 21.00

SCALE: 1/4" = 1'-0"

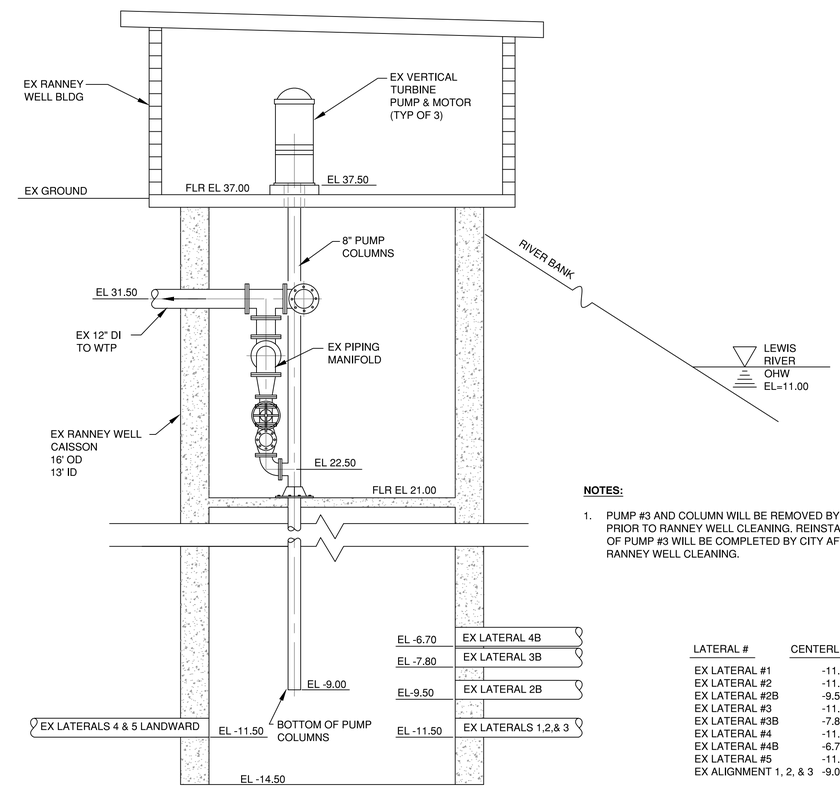

NOTES:

1. PUMP #3 AND COLUMN WILL BE REMOVED BY CITY PRIOR TO RANNEY WELL CLEANING. REINSTALLATION OF PUMP #3 WILL BE COMPLETED BY CITY AFTER RANNEY WELL CLEANING.

LATERAL #	CENTERLINE ELEV
EX LATERAL #1	-11.50
EX LATERAL #2	-11.50
EX LATERAL #2B	-9.50
EX LATERAL #3	-11.50
EX LATERAL #3B	-7.80
EX LATERAL #4	-11.50
EX LATERAL #4B	-6.70
EX LATERAL #5	-11.50
EX ALIGNMENT 1, 2, & 3	-9.0

7/M1 Pump Station Typical Section View

SCALE: 1/4" = 1'-0"

GIBBS & OLSON
CIVIL ENGINEERS • LAND SURVEYORS
www.gibbs-olson.com

City of Woodland
Ranney Well Cleaning
Pump Station Plans, Section & Elevation

DRAWING: T:\PROJECTS\0876 WOODLAND\5003 PUBLIC WORKS\FIGURES & EXHIBITS\RANNEY WELL CLEANING FIGURE.DWG, LAYOUT TAB: FIGURE 1, PLOT DATE: 5/24/2023 1:09:37 PM, DRAWING SAVE DATE: 5/24/2023 12:41:52 PM, PLOTTED BY: KROGERS
PLOT DEVICE: GIBBS & OLSON - Pwp 10 PDF.pc3, PLOT STYLE TABLE: GIBBS-OLSON-STANDARD.MONOCHROME.CTB, PAPER SIZE: GIBBS & OLSON - FIGURE P SIZE (LANDSCAPE - 34.00 X 22.00 INCHES)